NATIONAL LIGHTING BUREAU

The NLB Guide To Industrial Lighting

The NLB Guide to Industrial Lighting

1300 N. 17th Street, Suite 1847
Rosslyn, VA 22209
(703) 841-3274

NATIONAL LIGHTING BUREAU

Table of Contents

Introduction	1
Better Lighting Benefits Industry	2
Key Concerns	8
Lighting Economics	14
Lighting Management Options	19
Developing and Implementing a Lighting Management Plan	34
Sources of Assistance	36
Glossary of Terms	38

Introduction

Industrial lighting management has never been more important. Effective electrical illumination supports high levels of worker productivity and safety, while reducing rejects and enhancing quality control. Effective lighting also minimizes energy waste and thereby helps to conserve our natural resources and contribute to a cleaner environment.

This guide has been prepared to inform plant managers and related personnel of important factors they should consider in evaluating existing lighting systems and developing plans for modifications or new systems. Failure to consider important factors can result in excessive waste. This waste is not limited to energy alone. It also includes the waste of human resources, in the form of lost productivity or rework made necessary by errors. By contrast, when management directs an effective approach, its benefits multiply. This approach begins with adopting an appropriate attitude. As a basic rule, do not regard lighting as an expense or necessary evil. It is a tool and, as any other tool, the more effectively it is used, the more valuable it becomes. This point is explained in the following section which describes the benefits of effective lighting, supported by case histories from the files of the National Lighting Bureau that document the value others have derived.

A number of basic lighting system issues should be grasped by whomever directs the effort. A fundamental issue is understanding that a lighting system comprises far more than light sources. The second section, titled *Key Concerns*, provides some sound guidance in this respect.

A section on lighting economics relates simple techniques for determining the cost of owning, operating, and maintaining a lighting system, evaluating benefits, and comparing options on a bottom-line basis. The next section addresses various lighting system components and techniques for applying them to maximum effect. Lighting system maintenance is included as a component, in part because it can have financial consequences far greater than many presume.

Techniques for developing an effective lighting management plan are presented as one of the guide's final elements, followed by an annotated listing of organizations that can assist, and a glossary of terms.

Above all, recognize that the cost of lighting has little to do with its value. Imagine what would happen if work in your plant had to be conducted without light: the errors that would be made; the accidents that would occur. To a very real extent, the difference between no lighting and some lighting is the difference between some lighting and a system designed expressly for your facility, to further the purposes for which lighting was installed to begin with. A person with little training in electric illumination cannot achieve the results a professional can. But, professionals cannot attain best results unless they have input from those familiar with the plant. The two must communicate, and facilitating that process is the purpose of this guide.

Better Lighting Benefits Industry

Industrial lighting systems typically are regarded as expense items. Accordingly, when bottom-line factors are considered, reducing lighting costs becomes an issue. But lighting is not installed to be an expense. Its purpose is to provide the illumination needed for specific tasks. The better that illumination is, the better the illuminated tasks can be performed. And better performance can have a financial impact that is hundreds of times greater than the dollar savings derived from energy conservation. This is not to say that industry should eliminate energy conservation as a priority. Far from it. However, when it comes to illumination systems, those responsible need to recognize and appreciate the relationship between lighting and human performance. It makes little sense to modify a system in order to save energy worth $1,500 per year, when doing so could result in a productivity loss worth $15,000 per year.

Fortunately, America's lighting manufacturers have developed an amazing array of systems and components that can help industry maximize lighting system benefits and efficiency. To realize the full value of these products, it is essential to apply them effectively. Effective application can occur only when those responsible for lighting management are familiar with the benefits of better lighting, and the value that these benefits can provide. The following discussion is intended to present reliable information about benefits, supplemented by case histories that indicate how others have put these benefits to work.

IMPROVED PRODUCTIVITY

Most industrial operations involve eye/hand coordination, and thus can be termed visual tasks. (Tasks that are not visual tasks can literally be performed with one's eyes closed.) Almost a half-century of research and many case histories demonstrate that better lighting — i.e., lighting better suited to the space, tasks, and workers involved — permits people to perform visual tasks faster, with fewer errors. The dollar values involved can be enormous, even for relatively small industrial operations. For example, assume a three-shift industrial operation comprising 20 workers per shift. The average wages paid to each worker amount to $20,000 per year. Fringe benefits and Social Security payments add another 30 percent, bringing the total to $26,000 per worker, and $1.56 million for the entire 60-person work force. In this situation, a productivity improvement that raises output by just 1 percent per year would have a value of $15,600. By contrast, the annual cost of operating and maintaining the lighting system needed by the 60 workers probably would not exceed $3,500. As such, it would be worthwhile to quadruple annual lighting system operating and maintenance (O&M) expenses in order to achieve a productivity increase of only 1 percent. In fact, however, most lighting-induced productivity increases reported to the National Lighting Bureau exceed 1 percent, and more often than not are accompanied by

reports of O&M cost reductions, not increases.

LOWER REJECT RATES

Errors sap productivity because time must be spent redoing what should have been done properly to begin with. Errors become even more costly when they result in more material being used, along with unnecessary energy consumption and equipment use. Better lighting has been shown to reduce reject rates by as much as 25 percent and more. The value of such a benefit can be significant, depending on the value of the source materials used, wages paid to plant personnel, and similar factors.

CASE IN POINT

After comprehensive analysis by its own engineers and an energy specialist employed by Pacific Gas & Electric, Control Data decided to install all new fluorescent lighting at its Sunnyvale, CA, facility. Particularly affected was the company's ten-member Operations Group, whose work had far-reaching network consequences. Soon after the new lighting was installed, Operations Group personnel reported that the new lighting not only enhanced the appearance of the space, but also improved task visibility. Due particularly to elimination of video display terminal (VDT) screen glare, they were able to boost overall productivity by 6 percent, accomplishing in eight hours what formerly took 8.5. The value of this benefit was set at $28,000 per year. Even more impressive was the value of downtime avoided each year, estimated to be worth an additional $200,000. Add to these benefits $7,290 worth of operating and maintenance (O&M) costs saved each year (a 60 percent reduction), and the total benefit amounted to $235,290. Given the company's $14,890 investment, simple payback occurred after 23 days, with a simple return on investment (SROI) of 1,580%/year.

BETTER QUALITY CONTROL

Although fewer rejects can result in better quality product overall, fewer rejects do not necessary mean that quality control has been enhanced. Better lighting can make a substantial difference, however, because it makes visual inspection more effective. Through proper selection of lighting, it becomes easier to evaluate the colors of finished goods. Through proper mounting of fixtures, detection of painted surface imperfections becomes simpler. In fact, a specific form of lighting can almost always be developed and applied to best illuminate finished goods for the conditions under which they are inspected, to minimize the likelihood of problems finding their way to a company's customers.

INCREASED CUSTOMER SATISFACTION

When fewer errors are made, and when a higher percentage of errors get caught before leaving the factory floor, customers cannot help but become more satisfied with a company's products. And quality, at last, appears to be coming to the forefront in American industry. This does not mean that consumers will spend an unlimited amount for quality, however; it must be provided at a competitive rate. Modern lighting provides support in that area, too, of course, by helping to achieve higher levels of productivity, fewer costly rejects, and high levels of energy efficiency.

IMPROVED IMAGE

A company's image is influenced substantially by its products' quality. As already noted, lighting can provide strong support in that respect. But image also is shaped when buyers visit a plant. Facilities

with a clean, contemporary appearance cannot help but impress buyers. It is not unusual for people to assume that the care and concern demonstrated in manufacturing areas shows up in the design and manufacture of the products involved. And the opposite also is true. When a manufacturing area appears dingy and dirty, one can assume with some justification that the products might not embrace the latest technology or are not subject to the rigorous quality control assumed to exist in foreign plants. Note, too, that some plants need to consider their community image. Outdoors at night, lighting can be used to highly positive effect in enhancing the appearance of a facility and its grounds. (Details on outdoor lighting can be found in the National Lighting Bureau's guide, *Lighting for Safety and Security.*)

MORE SALES

Better lighting can contribute to increased sales by contributing to the quality of the finished product, and by contributing to the competitiveness of the pricing. Image factors can also be of value in this respect.

IMPROVED SAFETY

Lighting is essential for enhancing safety inside a plant. It should be used to illuminate areas where slipping/tripping hazards are likely to occur due to liquid spills or for other reasons. It can also be applied to call attention to spinning and bladed objects or operating machinery. Note, too, that the same lighting that permits workers to see tasks better also helps them avoid the mistakes that can lead to injury. How much are such benefits worth? The most significant aspect of enhanced safety is not readily calculable, given that it helps preserve a better quality of life for more workers. A number of dollar factors are involved, however, not the least of which is the time that is saved through accident avoidance: the time associated with the affected worker; the time of those who may be working with or near that worker; and the time required to handle the paperwork that stems from an accident, such as insurance reports and state and/or federal OSHA filings.

LOWER INSURANCE RATES

Companies that enjoy excellent safety ratings usually have more potential insurers to select from and are offered lower rates, in part because insurers are eager to insure good risks. In several cases of which the National Lighting Bureau is aware, better lighting has led directly to better safety records which, in turn, have led to insurance premium reductions whose value has been close to the cost of lighting system modification.

LESS ABSENTEEISM

Absenteeism is a serious problem for American industry, because it often necessitates reliance on temporary workers who may cost more than absent full-time workers, and who cannot produce as much. Fewer accidents result in less absenteeism. But better lighting can contribute in additional ways, by minimizing the glare that is commonly associated with inadequate lighting. Glare forces eye muscles to work overtime in order to keep pupil size adjusted to minimize discomfort. The muscle strain that results contributes to headaches and fatigue. In a number of case histories documented by the National Lighting Bureau, better lighting has led to significant reductions in absenteeism and its cost.

IMPROVED SECURITY

It is somewhat common for people to speak of safety and security lighting as though the two essentially are the same. This is not the case, however. Lighting that is designed principally to provide safety will not necessarily provide security, and vice versa, unless it is specifically designed to do so. Accordingly, it is best to speak of safety and security as the different issues they really are. In the industrial setting, security issues typically relate to prevention of unauthorized entry and the potential of criminal activity outdoors, ranging from simple vandalism to parking lot crimes and assaults. Effective outdoor lighting almost always is a major element of any security program, by eliminating the

CASE IN POINT

"We had been planning to improve lighting for the past five years or so, but the dollars required for remodeling could not be justified based on O&M [operation and maintenance] savings," according to John J. Kaufman, manager of American Hardware Supply Company's 318,000-square-foot distribution center at the company's national headquarters in Butler, PA. But, based on a comprehensive analysis, Mr. Kaufman decided on a relighting program. It was his goal to improve the quality of electrical illumination at the distribution center to attain the benefits of better lighting. His plan was completely successful. Relying on many of the existing fixtures (cleaned and relamped), plus new metal halide units, the plan achieved the following objectives:

- *Due to better lighting, personnel were able to work faster than before. Mr Kaufman estimated that at least a 1 percent productivity improvement was achieved, worth a minimum of $35,000 per year.*
- *Better lighting has also resulted in fewer errors being made. The savings, estimated at $1,800 annually, are comparatively small because there was so little room for improvement.*
- *Because of the company's excellent safety record, it was assumed that little could be done to make it better. Nonetheless, the company estimated that the benefit of better lighting carried a value of $1,000 per year, due to time savings and lower insurance premiums. As Mr. Kaufman noted, "The principal benefit involved is one that cannot be calculated; sparing loyal employees the pain (or worse) that can result from an injury."*
- *Increased sales worth $50,000 annually to the company are attributed to the better lighting, in large part because of the much improved image created when customers visit the facility. As Mr. Kaufman noted, "The one word most commonly heard when we take [a store] owner or prospective owner through the warehouse is, 'Wow.' The lighting is the first thing they see when they enter. It makes the warehouse look much larger than before, much cleaner, and more contemporary. It instantly conveys the impression that we are a large, modern organization...."*
- *Employee morale also increased, because employees were able to perform their work faster and better, liked the improved appearance of the space, and appreciated management's investment in employees' comfort and safety.*

Overall, productivity and related benefits carried a value of just under $88,000 per year; O&M cost savings added another $14,746 to the total, bringing it to $102,546 annually. Given the company's investment of $176,806, simple payback was achieved in 1.7 years; simple return on investment (SROI) came to 58%/year.

darkness preferred by those up to no good. When people think of security lighting, however, they do not usually think of lighting that also beautifies an area and/or facility. Nonetheless, when outdoor lighting systems are effectively designed, they provide far more than security alone, and thus can contribute to safety, positive image, and a variety of other factors. More information on this topic is covered in the NLB

guide, *Lighting for Safety and Security.* Note that lighting systems also contribute to indoor security. For example, motion detectors can be used to activate lighting in a space or area where they detect the presence of people. Thus, at night, when an area that should be dark is illuminated, security personnel obtain a visual alert of a potential problem. During the day, these occupancy sensors can be applied to minimize energy waste by automatically deactivating electric illumination within a preset time after no further occupancy is detected. When converted to the security mode, they can be integrated with alarms or other devices to augment their security application. Among its many other benefits, improved security contributes to lower insurance premiums.

IMPROVED EMPLOYEE MORALE

It is difficult to ascribe a bottom-line value to better employee morale, but it usually can be noticed and it is known to contribute to the attainment and/or value of other benefits created by lighting. Typically, morale improves as a consequence of better seeing conditions and improved appearance of the work area. Morale can also be elevated when employees are less distracted by mistakes and the need to reperform work. Morale can also jump when management demonstrates its concern for employees' well-being by installing lighting designed to enhance safety indoors or to reduce problems outside.

BETTER COMMUNITY RELATIONS

As already noted, reliance on lighting to improve the outdoor appearance of an industrial facility at night can have a pronounced effect on community relations. At the very least, it helps an industrial operation become a better neighbor. But lighting can also contribute to positive community relations by elevating employees' attitudes toward a facility. When people feel good about their workplace, they often like to let others know. Positive "word of mouth" can go a long way toward improving a company's position in the community. Better community relations can also have "ripple effects," by increasing the potential labor pool and making it easier and less costly to find good employees.

LESS DOWNTIME

Downtime often occurs because mistakes made in production cause a piece of machinery to break down. Better lighting can help reduce this potential, at least to the extent that a problem is caused by a visual error. Note, too, that downtime frequently is occasioned by equipment that breaks down soon after it is repaired. Better lighting helps make this less likely, since it permits those working on equipment to identify parts that are near failure so equipment can stay operating longer. In one case history, performance in a hosiery mill's knitting machine repair shop was improved 10 percent due to better electric illumination.

ACCOMMODATION OF CHANGE

"The lighting here is inadequate" is not an unfamiliar statement for those involved with electric illumination. But lighting does not become inadequate all by itself! Very often it either was not effectively designed to begin with, or the tasks it illuminates have been changed. The most common such situation occurs when video display terminal (VDT) screens are introduced to a space where they have never been used before, and the lighting system designer did not contemplate their use. The typical VDT screen has a highly specular surface, and — since the surface is perpendicular to a workstation surface — working with a VDT can be generally described as performing a vertical task. By contrast, the typical tasks for which most existing lighting systems were designed are performed in the horizontal plane (e.g., looking down at something on a desk or workbench surface) and have a matte or nonspecular surface. Thus, while much of today's lighting is not adequate for the tasks to which it is being applied, it is not the fault of the lighting. Regardless of who may be at fault, however, modern electric illumination systems permit indus-

trial managers to accommodate future needs through flexibility. By relying on luminaires (lighting fixtures) that are easily moved and/or whose height from the floor or whose light output can be easily adjusted, one can help assure optimal lighting conditions over time. The same types of systems allow simple substitution of fixtures, to permit radically different types of lighting when the tasks are substantially modified, e.g., when vertical lighting must support horizontal tasks.

TAX AND OTHER BENEFITS

Certain types of lighting can provide tax advantages other types cannot. This applies particularly to some of the flexible lighting systems mentioned above. Since they can be easily removed and relocated, they reportedly do not have to be classified as improvements to real property and, as such, may be subject to faster depreciation than otherwise. Likewise, it may be possible to lease such lighting or elements of it, thereby writing off the system as an ongoing expense while also preserving credit lines. By understanding the options available, industrial management should be able to work with appropriate financial advisors to identify the most cost-effective options, all factors considered.

LOWER UTILITY COSTS

As some of the case histories in this guide illustrate, better lighting almost always results in more energy efficiency, but more efficiency does not always mean lower utility bills. While a new system can virtually eliminate waste, it might be much larger than the former system, and thus cost more to operate and maintain. However, the latter situation is far more the exception than the rule. The new lighting installed to improve productivity, reduce rejects, and so on, can also result in lowered utility charges for energy and electrical demand. Due to increased productivity and fewer errors, better lighting can also contribute to less energy being consumed per finished unit. And, by reducing the time required to produce a given quantity of product, that much less energy is consumed in keeping the plant running.

MORE PROFIT

It certainly would not be typical for an industrial operation to look on its electric illumination as a profit center, but better lighting can contribute significantly to more profit, for virtually all the reasons given above: less labor per unit, less energy per unit, more units per hour or worker, more sales, fewer rejects, etc. The key to achieving the benefit of more profit, and all the other benefits, is really one of attitude. If one approaches lighting as an expense that should be reduced, chances are an effort will be made to cut expenses without regard to other factors. However, by approaching lighting as a means to derive benefits whose value greatly exceeds whatever the cost of lighting may be, significant profit can be realized. And that, when all is said and done, is what effective lighting management is all about.

Key Concerns

To derive the most from your industrial lighting system, you need to understand several important concepts, such as those discussed below.

THE OVERALL SYSTEM

When you hear "lighting system," you probably think in terms of lamps, luminaires, controls, and wiring. Possibly you also consider windows and skylights, the principal sources of natural illumination or "daylighting." But a lighting system actually comprises almost everything in an illuminated space, because almost everything there is reflective to a greater or lesser degree and thus serves as an indirect light source. In fact, the quantity of light you need to achieve good "seeing conditions" depends on the color and texture of space surfaces. The quality of light provided is similarly influenced. Accordingly, if you are considering lighting system changes, allow your scope of consideration to go beyond light sources alone. Evaluate the interrelationships between source light, reflective surfaces, workers, and tasks. By understanding the overall system, you are in a much better position to derive maximum benefits and value.

QUANTITY AND QUALITY

Although it is convenient to speak of lighting quality and lighting quantity as separate considerations, it is virtually impossible to have high-quality lighting unless it provides the quantity of illumination appropriate for the purpose.

Illuminance is the term used to indicate the amount of illumination being provided by a system, typically in specific areas of a space. The areas of most concern tend to be workstation or task surfaces, since illumination there has a direct and immediate impact on productivity and error rates. If an insufficient amount of light is provided, poor visibility forces workers to perform more slowly and make more mistakes than they otherwise would. Nonetheless, even having the perfect amount of light cannot guarantee good lighting quality or even that human performance will benefit. As an example, assume a worker is performing an assembly task on a flat surface. The amount of light provided is exactly right based on ranges suggested by the Illuminating Engineering Society of North America (IESNA) and considering the condition of the worker's eyes. The worker bends his head down to commence operations and immediately casts a shadow over a portion of the task surface (i.e., the surfaces of the pieces being assembled). The shadow is a quality factor that obviously was not considered in design, resulting in low-quality lighting. Similarly, on the factory floor or in office space, people will look up from a VDT screen only to be dazzled by glare from a lighting fixture in their field of view.

Many of the factors commonly associated with quality-impaired lighting — shadows, glare, reflections — have the effect of creating discomfort because of strains imposed on the tiny muscles that

control the eye's functions. The source of that discomfort may not be readily apparent, however, causing people to wonder why they experience eyestrain or headaches. For this reason, several NLB case histories document noticeable absenteeism improvements as a consequence of better lighting.

Note that both lighting quantity and quality affect and are affected by the overall illumination system.

LIGHTING EFFICIENCY

Given the importance of using energy wisely, it is shameful to waste even one kilowatt-hour of electricity. But how much energy something uses is not a measure of its efficiency. For example, consider a subcompact car and a moving van. The car has an "efficiency rating" of 50mpg, compared to the moving van's 10mpg. The car is more efficient, correct? No! Not when a houseful of furniture has to be moved 2,000 miles.

The analogy applies to lighting. To determine efficiency, it is essential to evaluate the application and how it is affected. In other words, if warehouse lighting energy consumption is cut by 10 percent, but productivity falls as a result (indicating functional impairment), it can hardly be said that lighting efficiency was improved.

CASE IN POINT

When Pennsylvania Power and Light Company's Jim Holder visited Metal Industries, Inc.'s 100,000-square-foot plant in Elizabeth, PA, he knew better lighting could be of value. The manufacturer of metal-framed windows and patio doors, among other products, was relying on outdated fluorescent fixtures that produced far less light than appropriate for the tasks being performed. Mr. Holder developed several alternatives for Plant Manager Sam Sitlinger to consider. The one ultimately selected called for the addition of 70 high-pressure sodium (HPS) fixtures to supplement what already existed. The company invested just over $8,000 in the new system and operation and maintenance (O&M) costs climbed from $7,254/year to $27,114/year. Were the investment and additional O&M costs justified? Decidedly so. After 18 months' experience with the system, Mr. Sitlinger reported the following benefits:

- *Productivity in all areas increased by at least 5 percent and, in some, by far more than that. Nonetheless, even when the conservative 5 percent figure is used, the value of increased productivity must be calculated at $1.5 million annually.*
- *The reject rate was reduced by 25 percent, from 4 percent to 3 percent. As a result of fewer rejects, Metal Industries saves on labor, energy, and materials. Overall savings were set at $200,000 annually.*
- *Accidents, which were rare before, became almost nonexistent. As a result, the company began saving an additional $3,000 per year.*
- *As a consequence of fewer accidents, the company's insurance premiums were reduced, saving another $3,000 annually.*
- *Absenteeism dropped due principally to fewer accidents, saving the company an additional $225,000 annually.*

The net benefit achieved as a consequence of better lighting amounted to $1,911,140/year ($1,931,000 less $19,860 in additional O&M costs). Given the size of the investment ($8,050), simple payback was achieved in an amazing 37 hours, *creating a simple return on investment (SROI) of 23,741%/year.*

CASE IN POINT

Rich Rea, Vice President and General Manager of Superior Pipe Specialties Company (Cicero, IL), knew his company could reduce energy consumption by installing new lighting, but obtaining the productivity and other benefits of better lighting was his principal motivation. He called on Ken Figura, a project engineer with Sievert Electric Company (Melrose Park, IL). Together, Rich and Ken surveyed the 65,000-square-foot plant where workers engaged in basic heavy metal operations: welding, forming, and intricate bending for major utility pressure boilers. After evaluating several alternatives, Rich decided to invest almost $40,000 in a new high-pressure sodium (HPS) lighting system. He also kept close records of the employees' performance and, after a year, he assessed the benefits of better lighting.

- *Productivity increased significantly throughout the plant, in some areas more than others. His estimate of overall productivity improvement was 2 percent, which he admitted was conservative. But even at that relatively low number, the savings amounted to $32,000 per year.*
- *The number of rejects also was greatly reduced thanks to better lighting. "By my calculations, considering the value of rework time, and considering materials, we're saving $48,200 per year," Rich Rea said.*

In addition to the benefits of better lighting, Superior also reduced its lighting system operation and maintenance (O&M) costs by $3,361 per year, for a total benefit of $83,561 annually. Simple payback occurred in 25 weeks, and the simple return on investment (SROI) was 210%/year.

displayed. Delays and errors can prove extremely costly given the size and/or importance of the procedures associated with digital control.

Many companies that have invested in computerization have been frustrated by results that are far from the predictions and projections that were used to justify the initial investment. In a number of cases, the cause of the problems has been traced to incompatibility between VDTs and the lighting system. VDT lighting needs are unique. When these needs are not adequately addressed, VDT screens are subject to reflective conditions that obscure or distort displays, slowing a process that requires immediacy and leading to input errors. In short, either the VDT must be designed to accommodate the existing lighting, or the existing lighting should be redesigned to accommodate the needs of VDT operations. The Bureau's *Solving the Puzzle of VDT Viewing Problems* is "must reading" in this regard.

SPECIAL NEEDS

A variety of industrial operations imposes special needs on lighting applications. Many of these center on quality control functions. For example, when certain colors must be achieved, lighting should be designed to create the conditions under which the colors can be evaluated. Location of a light source with respect to the task and worker involved can also be manipulated to aid in the evaluation of a finished surface, and shadows can be applied in that manner, too.

OPERATOR ORIENTATION

As a final concern, it is worthwhile noting a basic and most important dictum: *Light is for people.* If productivity is to improve, people will have to do it. If safety is to improve, people will have to do it. Do not assume all people are the same insofar as lighting needs are concerned, because they are not. For this

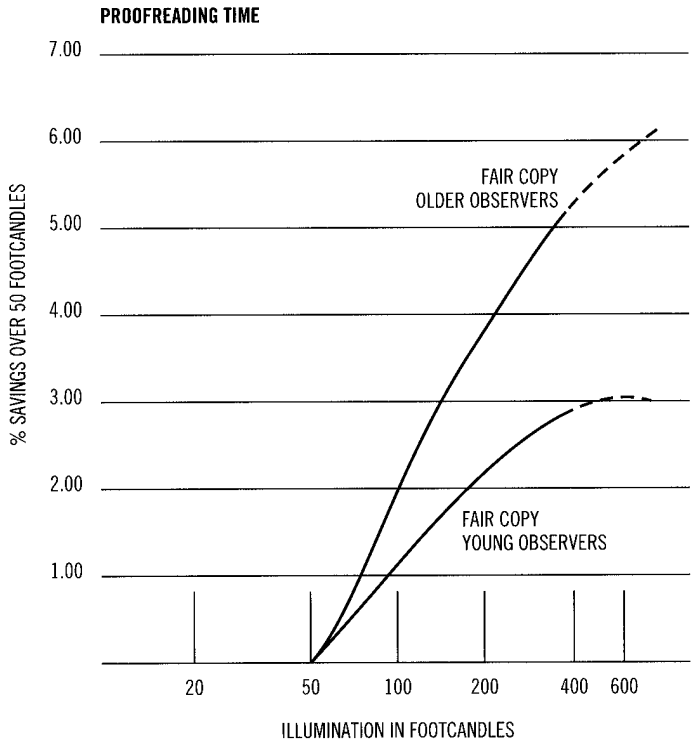

Figure 2: Results of a proofreading experiment show that both older and younger workers' productivity increased dramatically as better illumination was provided, with older workers deriving even more benefit than their younger counterparts.

reason, too, flexibility is a key concern. But consider more than lighting flexibility. Consider, also, techniques for adjusting positions with respect to lighting of tasks, point of view, and other critical factors. Recognize that older workers tend to have lighting needs that are far different from their younger counterparts. As indicated in Figure 2, however, improvements that have a dramatically positive impact on older workers can have a salient effect on younger people as well.

IMPORTANT NOTICE

Black letters on a white background are easy to read. You can read this notice quickly and not make errors. Now, read the notices on pages 15 and 17.

Lighting Economics

Several factors should be understood to help assure effective analysis of your current lighting and any proposed changes to it.

CALCULATING UTILITY COST

A local electric utility representative can give you specific guidance on important basic data, such as the rate structure applicable to your operations. In most cases, however, two principal charges have more impact than others: energy and demand.

Energy is computed in terms of kilowatt-hours (kWh). This equates to the electrical load in use and the amount of time it is used. The electrical load can be subdivided into types, such as lighting load, cooling load, or process load.

Assume, for example, that the lighting load is created by 100 luminaires, each of which has a power requirement of 300 watts. The lighting load thus would amount to 30,000 watts or 30 kilowatts (30kW). If the lighting is kept on for 10 hours, the energy consumption would be 300 kilowatt-hours (300 kWh). If the utility charges $0.08 per kWh, the cost of the usage would be $24. (It is worthwhile to note, in passing, that a 30kW system would indicate a fairly good-sized operation, comprising 75 to 100 people or more per shift. Paying $24 for ten hours' worth of lighting is typical, and a very small price to pay considering what would happen to industrial operations were the lighting not available.)

Most utility energy charges are computed as:

$$\text{Energy Cost} = \text{kW load x hours of use x \$/kWh}$$

The other typical component of a utility bill is the demand charge. The demand charge considers the rate at which your facility consumes energy and that rate's impact on utility requirements. As an example, consider a facility that needs to meet a 250kW load. The utility must provide the power on demand. It needs to have the capacity to generate the power and transmit it to the point of use when needed. Assuming that the plant applies the full load 100 hours per week, electrical energy consumption amounts to 25,000kWh weekly. At a rate of $0.10 per kWh, energy cost is $2,500.

Now assume the plant's operations are reconfigured and it is necessary to have 500kW of power available on demand. The utility must invest more in production and transmission to accommodate the new need. However, reconfigured operations permit a usage reduction to 40 hours per week. This lowers energy consumption to 20,000kWh per week and reduces the energy charge to $2,000. Thus, even though the utility would be required to increase its investment, it would receive less income and less profit based on energy costs alone. To circumvent this inequity, utilities monitor demand to determine peak usage and impose a separate charge. Thus, if maximum demand is 500kW, the bill for it could be $5,000 per month, or more.

A variety of methods can be used to lower demand charges, including installation of automatic load-shedding equipment and scheduling certain operations to off-

peak periods. This kind of demand management can be particularly important when the local utility imposes a "ratchet clause." A ratchet clause states, in essence, that the highest demand reported in a given period will govern demand charges for a number of months.

If demand is not a significant utility cost factor, "broad-brush" estimates can be formulated by applying a manipulated kWh rate that has been increased to consider demand charges. If demand does comprise a significant portion of the utility bill, separate calculations may be warranted.

CALCULATING OTHER OPERATING AND MAINTENANCE COSTS

Replacement lamps are a key maintenance cost. These can be evaluated on an annualized basis, as noted above. In determining the useful life of lamps, the rated life generally should not be applied. The rated life indicates average life expectancy of the lamp based on a uniform set of test conditions. It generally is unwise to leave lamps in place until they burn out, however, because — with few exceptions — their light output diminishes with time. At some point, depending on lamp-specific factors, light output will dip so low that productivity and other lighting benefits will experience negative consequences. Factors unique to your facility should be considered in developing the appropriate replacement schedule.

The annualized cost of replacement lamps is:

$$\text{Annualized Lamp Cost} = \$/\text{lamp} \times \text{no. of lamps in system} \times \frac{\text{annual hours of use}}{\text{useful lamp life}}$$

One also can consider the cost of lamp delivery, storage, and handling.

Lamp replacement labor considers the time required to relamp and the hourly rate paid (including fringe benefits and other elements). Group relamping is suggested to minimize time requirements and derive other benefits discussed under *Lighting Management Options*. Group relamping involves simultaneous replacement of all lamps with the necessary equipment, materials, and personnel assembled for the purpose, typically after regular operating hours to avoid impeding operations. Group relamping times of three to five minutes (0.05 to 0.08 hr.) per lamp are not uncommon. When lamps are replaced as they burn out (spot relamping), changing times can be ten times those associated with group relamping.

Lamp/luminaire cleaning is another important maintenance function. Without it, dirt build-up can diminish light output and thereby impair productivity. Dirt build-up can also damage lighting fixtures.

COST OF OWNERSHIP

The cost of ownership can be computed in a number of ways. On an annualized basis, it can be determined as initial cost divided by the system's anticipated lifetime, or present-value analysis can be applied. It could also be set equal to the principal and interest paid on a loan, and/or depreciation factors can be considered. As noted below, however, it is not necessary to own a lighting system in order to have one.

BENEFIT VALUE ANALYSIS

As already discussed, energy-based benefits are most commonly

IMPORTANT NOTICE

When lighting is inadequate because quality has been eroded by a condition such as veiling reflections (see page 17), contrast is impaired and it takes longer to read — with a greater likelihood of errors.

CASE IN POINT

Reading about the productivity benefits of better lighting inspired Casey S. Janiszewski, president of Superior Die Set Corporation (Oak Creek, WI), to have his company's existing lighting system reviewed. He retained Witold Zalewski to examine the 42,000-square-foot facility and its operations and to develop recommendations. Although the recommendations called for relatively conventional modifications, their application produced startling results.

- *Occupancy sensors installed in the lavatories automatically extinguished lighting there within a predetermined period of time, encouraging company employees to keep their "visits" somewhat brief. The value of time savings was estimated conservatively at $3,400 per year.*
- *In drafting areas, new ballasts and current-limiting capacitors were installed both to reduce energy consumption and to lower lighting levels. According to Mr. Janiszewski, "There was so much light bouncing off the [drafting] paper that contrast was being eroded. The details on the surface of the paper were being washed out....We provided better seeing conditions so drafters could reduce their errors." The change not only helped reduce the amount of time required to produce a finished drawing; it also lowered the absenteeism rate, because of fewer headaches and less eyestrain among the seven drafters and four engineers who used the facility. The value of the productivity savings was set at $37,500 per year.*
- *Workers in the operations area of the company's computer room were bothered by light from the disk drive area, visible from the operations area via a window. An occupancy sensor was installed in the disk drive area, so lighting was on there only when people were present, which was seldom. As a consequence of the reduced glare in the operations area, downtime fell by four hours per month, saving the company $5,736 per year. The number of errors also was reduced, but calculating the savings involved is not possible, since some errors can result in far more cost than others.*

All told, Superior Die Set Corporation invested $2,980 in modifications that generated productivity gains and downtime savings worth more than $42,836 each year. The modifications also created energy savings and other O&M benefits worth $1,748 annually, for a total benefit of almost $45,000. Simple payback was achieved in less than 24 days. The company's simple return on investment (SROI) was just under 1,500%/year.

considered because they are the easiest to calculate. Certain maintenance costs can also be affected, especially the cost of lamp replacement when 20,000-hour lamps are used instead of 10,000-hour lamps.

As demonstrated by the various "cases in point" included in this guide, as well as numerous other cases in NLB archives, the most valuable benefits are those associated with increased productivity, fewer errors and rejects, better quality control, and reduced accidents, among several others. These also can create some highly valuable ripple effects, as when fewer accidents lead to lower insurance premiums and better quality control results in more customer satisfaction, more customers, and more sales.

To what extent will better lighting affect your operations? An

experienced lighting professional can provide good insight by explaining the degree to which the existing system's output deviates from the optimum quantity and quality of lighting recommended for the facilities, operations, tasks, and workers involved. Would it be reasonable to assume that better lighting will lead to a productivity increase of 1 percent (36 seconds more productivity per hour)? What about a 5 percent reduction in accident frequency? These are the types of questions that only plant management can answer, and *they must be addressed* if projections are to be realistic. The task is not particularly difficult. In fact, the types of projections needed are virtually the same as those made every day to determine the value of one labor-saving device over another, e.g., the benefits of a computer or of automation. When particularly large operations are involved, in-plant tests can be conducted to make projections even more accurate.

COST ANALYSIS

Several well-established techniques can be used to evaluate different options, including the option of doing nothing at all. A key concern centers on techniques to evaluate future costs and benefits.When highly detailed data are needed, **present-value analysis** is used. This technique establishes today's value of money to be spent or received in the future, assuming a standard investment rate is available. For example, when it is possible to safely and easily obtain a 10 percent return on an investment, it could be said that $1.00 received today would be worth $1.10 in one year, or $1.21 in two years. Under the same circumstances, $1.10 received one year from now has a present value of $1.00, just as $1.21 received two years from now has a present value of $1.00.

Applying present-value precepts, it is possible to determine today's value of all future costs and benefits, using whatever rate of return (known as a discount rate) is appropriate. An alternative is to simply look at all data in terms of today's dollars. It is not as accurate, but it is simpler. Of course, when computer programs are used, present-value analysis is just as simple.

The most commonly used analytical procedure is **simple payback**, determined as investment divided by savings. For example, if a $5,000 investment in an energy-saving device will yield annual savings worth $2,500, it can be said that the device will pay for itself in two years:

$$\text{Simple Payback} = \frac{\text{Investment}}{\text{Savings/Year}}$$

$$\frac{\$5{,}000}{\$2{,}500} = 2.0 \text{ years}$$

Simple return on investment (SROI) is the inverse of simple payback, indicating percent return per year. In this instance, the simple return would be 50 percent:

IMPORTANT NOTICE

When lighting is inadequate because of insufficient quantity, contrast can be impaired in this manner. Inadequate lighting can diminish productivity and increase errors; good lighting can enhance productivity and reduce errors. Good lighting can also allow the eyes to work less, reducing problems associated with eye strain, headaches, and fatigue. In turn, these improvements can boost employee morale and provide other benefits as well.

$$SROI = \frac{\text{Annual Benefit}}{\text{Investment}}$$

$$= \frac{\$2{,}500}{\$5{,}000} = 50\%/\text{year}$$

SROI is similar to a **savings-to-investment ratio (SIR)**, except SIR considers all future benefits. As such, if the anticipated life of the device is 10 years, the SIR would be:

$$SIR = \frac{\text{Savings}}{\text{Investment}}$$

$$= \frac{\$25{,}000}{\$\ 5{,}000} = 5.0$$

SIR usually is computed using present values of future savings, since the investment will be in today's dollars. Accordingly, when the result exceeds 1.0, it indicates that the investment will yield a better return than the "standard" discount rate used in computing present values.

When comparisons are being made between similar investments, to determine which is best, present value analysis usually is needed to consider different life expectancies.

PROCUREMENT OPTIONS

A lighting system can be procured much as any other equipment or contractor operation. Recognize, however, that it may not be necessary to purchase a system. In some instances it may be possible to lease one, especially outdoor lighting or a flexibly wired indoor system. A shared savings approach also is possible. Through this technique, a portion of the energy savings is given to the provider. Typically, the provider is paid out in five years, after which the system belongs to the facility.

When purchasing a system, determine what assistance may be available from the local electric utility. Many provide cash payments for implementing certain options.

Lighting Management Options

Lighting management options are addressed most easily in terms of system components, the approach used in this section. Note, however, that applications should always consider system interrelationships. For example, selection of a light source should consider the luminaire in which the lamp will be placed, just as selection of both those components should consider the tasks being illuminated and the nature of the space involved. Each of the selection factors often is influenced by the nature of the maintenance that will be performed, another concern addressed below.

LAMPS

Six "families" of lamps are commonly used for general lighting in industrial facilities. These are incandescent, fluorescent, mercury vapor, metal halide, high-pressure sodium, and low-pressure sodium. All of these, except incandescent, are called gas-discharge, because they provide light when the gases they contain radiate due to electrical excitation. Incandescent lamps provide light when a filament inside them reaches a temperature high enough to cause it to glow or incandesce.

Both fluorescent and low-pressure sodium lamps are known as **linear sources**, because they are tubular. By contrast, the "bulb" shape of incandescent, mercury vapor, metal halide, and high-pressure sodium lamps results in their being termed point sources. The light distribution of **point sources** is more easily controlled than linear sources'.

One of the newer developments in lighting is the double-ended compact metal halide. Ranging in length from four to eight inches, these lamps are available in various wattages (e.g., 70W, 150W, 250W, and 360W), with the 360W version producing 25,000 lumens. When equipped with a compatible electronic ballast, these lamps have a rated life up to 12,000 hours.

Mercury vapor, metal halide, and high-pressure sodium lamps are also known as high-intensity discharge (HID) sources. Most HID lamps have to warm up before achieving full output and, once they are turned off, they have to cool down before they reactivate. Luminaire circuitry can in some instances reduce these "strike/restrike" time lapses. Accidental deactivation can be prevented through reliance on restricted-access controls.

As shown in Table 1, the **efficiency** of the six lamp types varies considerably. Technically known as efficacy, lamp efficiency is measured in lumens (of light output) per watt (of power required to operate the lamp). Generally speaking, any user is well advised to select the most efficient lamp suited for the application. More than efficiency should be considered, however.

The **color-rendering properties** of a lamp also bear evaluation, especially when the tasks involved are color-sensitive. Most lamps produce what is known as "white light," but the color will vary considerably, emphasizing different areas of the visible spectrum. This variability is a function of lamp

components, including the specific types of gases used, the phosphors applied to the inside of the envelope's walls, and the material from which the envelope is fabricated.

Most lamps produce "white light" that emphasizes different colors of the spectrum to make it appear warm or cool, soft or harsh. Conventional high-pressure sodium (HPS) lamps produce what some call golden-white light. Although it causes some color-shifting (e.g., reds take on a brownish hue), colors remain recognizable. Case histories suggest that HPS lighting can be particularly beneficial in areas where welding and similar operations are performed by "softening" the harsh light that is otherwise created. Color-corrected HPS lamps also are available. They do not last as long as conventional HPS lamps, nor are they as efficient. They are used principally to permit use of a "white" light source in an existing HPS luminaire.

Low-pressure sodium lighting, the most efficient of all, makes all illuminated colors appear as shades of yellow or gray. Its application is limited to areas and/or operations where color is not important; for example, in warehouses where stored items are picked by number or letter. Low-pressure sodium lighting can also be mixed in with other types, to elevate overall system efficiency.

For many years, incandescent lighting provided what most considered the best color light, since it closely emulated the effects of daylight. Today, however, certain types of fluorescent and metal halide lighting produce effects that some find the same as or even better than daylight's.

Lamp lumen depreciation (LLD) is the rate at which a lamp's light output diminishes with time. LLD is an essential selection criterion because it determines the frequency with which lamps must be replaced in order to maintain the lighting levels (illuminance) needed to attain high levels of worker productivity and safety, quality control, and other industrial objectives. Note, too, that LLD can affect overall system energy efficiency: Since energy consumption stays constant while light output diminishes, the lumens derived per watt diminish. (In the case of low-pressure sodium, the lumen-per-watt ratio declines because the power requirement increases while lumen output remains constant.) LLD curves for a number of common lamps are shown in Figure 4. As can be seen, LLD factors vary considerably, depending on the specific type of lamp involved.

A lamp's **rated life** is established through testing as the amount of time that expires before half the lamps in a large group of lamps burn out. Rated life is not as important a factor as **useful life**, which the National Lighting Bureau defines as the amount of time a lamp is used before its light output diminishes to that point when replacement becomes appropriate. Although some may perceive it as

TYPE OF LAMP	WATTAGE RANGE	INITIAL LUMENS PER WATT INCLUDING BALLAST LOSSES[2]	AVERAGE RATED LIFE (HOURS)
Low-Pressure Sodium	18 - 180	62 - 150	12,000 - 18,000
High-Pressure Sodium	35 - 1,000	51 - 130	7,500 - 24,000+
Metal Halide	70 - 2,000	69 - 115	5,000 - 20,000
Mercury Vapor			
Standard	40 - 1,000	24 - 60	12,000 - 24,000+
Self-Ballasted	160 - 1,250	14 - 25	12,000 - 20,000
Fluorescent	4 - 125	14 - 95	6,000 - 20,000+
Incandescent	15 - 1,500	8 - 24	750 - 3,500

Notes

1. Data are based on the more commonly used lamps and are provided for comparison purposes only. Actual results to be derived depend on factors unique to the specific products and installation involved. Consult manufacturers for guidance.

2. Lumens (of light output) per watt (of power input) is a common measure of lamp efficiency (efficacy). Initial lumens-per-watt data are based upon the light output of lamps when new. The light output of most lamps declines with use. The actual efficiency to be derived from a lamp depends on factors unique to an installation. The actual efficiency of a lighting system depends on far more than the efficiency of lamps or lamps/ballasts alone. More than the efficiency should be considered when evaluating a lighting system.

Table 1: General lighting lamp/ballast characteristics.[1]

wasteful to discard lamps that still function, just the opposite is true, as discussed later in this section, under *Maintenance.*

Lamp cost can be calculated in several ways. The least satisfactory method is using initial cost as a guide, because it fails to consider useful life. The shorter a lamp's useful life, the more frequently it must be replaced. This generates more costs, both for new lamps and relamping labor. For example, consider a facility that operates 500 100-watt (100W) incandescent fixtures 4,500 hours per year. The lamps in question have a rated life of 750 hours and cost $1.00 each. The cost of energy consumption and demand, assuming a combined average cost of $0.10/kWh is:

100W/lamp x 500 lamps = 50,000W = 50kW
50kW x 4,500 hours/year = 225,000kWh/year
225,000kWh/year x $0.10/kWh = $22,500/year

Since six lamps are used in each socket each year, the total outlay for lamps amounts to:

6 lamps/socket/year x 500 sockets = 3,000 lamps/year
$1/lamp x 3,000 lamps/year = $3,000/year

Assuming that it takes six minutes (0.10hr) to change each lamp on a group relamping basis, and that the labor cost incurred is $10 per hour, the cost of relamping labor is:

0.10hr/lamp x 3,000 lamps/year = 300hrs/year
300hrs/year x $10/hour = $3,000/year

The overall cost of the system is $28,500 annually. By comparison, 44W circline fluorescent lamps would produce about the same amount of light, yet their annual O&M cost would be less than half that of the incandescent system, not including the initial cost of the adapter/ballast. This is not an isolated type of case: Lamps that cost little to buy almost always cost a lot to own.

MANAGEMENT OPTIONS

With respect to existing lighting systems, two basic lamp options are

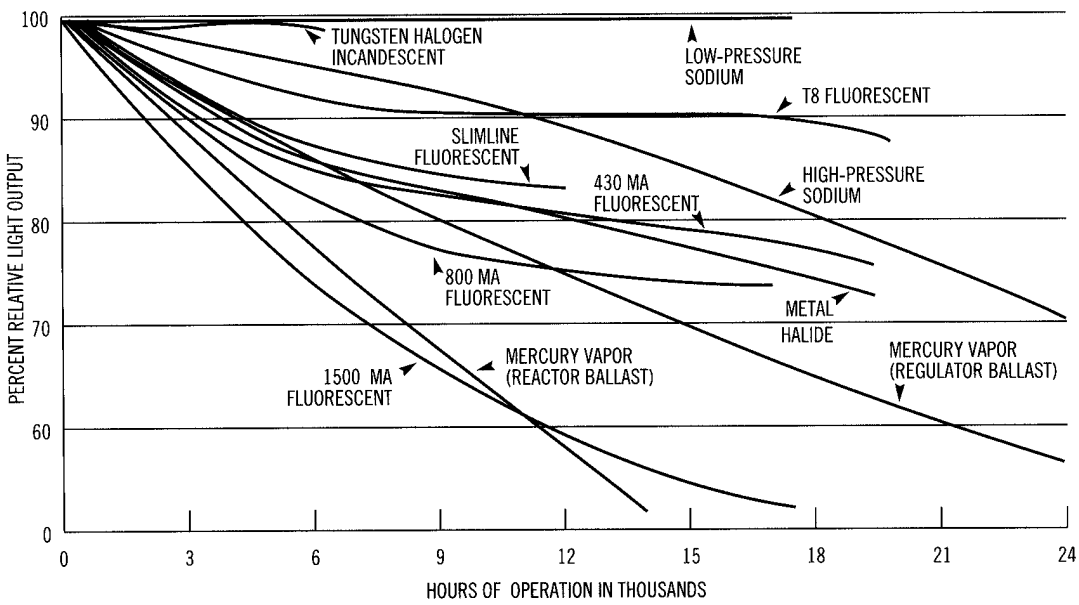

Figure 3: Lamp lumen depreciation (LLD) of some commonly used lamps.

available. One of these, already illustrated, is **direct lamp substitution**: The luminaire is left intact and a new lamp is installed. Typically, the replacement lamp is a more efficient version of the same kind of lamp (e.g., using a fluorescent to replace a fluorescent), or it is a different type of lamp that fits directly into the existing luminaire, sometimes by means of an adapter. A number of direct lamp substitution possibilities are indicated in Table 2.

The alternative to direct lamp substitution requires luminaire modification. In some instances the cost of modification is relatively minor. In most cases, however, the expense becomes somewhat significant because changes are not confined to those needed to accommodate a different type of lamp. This alternative is discussed on pages 25-29.

LUMINAIRES

A luminaire is a complete lighting unit, including lampholders, ballast, and shielding/diffusing media, among other components. (Ballasts and shielding/diffusing media are discussed separately, below.) Figure 4 illustrates a variety of commonly used industrial luminaires. Manufacturers rate these on the basis of several factors, including their efficiency and the amount of glare they produce.

In areas with relatively low ceiling heights, low-bay luminaires are employed. They are designed to spread light over a wide area while minimizing glare. By contrast, high-bay luminaires are characterized by concentrating or "medium-spread" distribution design. In some instances, however, low-bay luminaires are used in high-bay areas, and vice versa, in order to maximize task compatibility. Typically, when a high level of eye-hand coordination is required, the concentrating or medium-spread light distribution of the high-bay luminaire will be relied on if possible. Note, too, that some luminaires have been designed to distribute most of their light in the horizontal plane while others distribute most in the vertical plane. The former would be particularly suited for tasks performed on a workbench while the latter would be preferred to illuminate shelves in a warehouse.

Special luminaires are needed for some industrial tasks or areas. **Hazardous location** luminaires (Figure 5) are defined by the National Electrical Code (NEC) as follows:

Class I: Flammable Gases or Vapors
- Division 1: Normally Hazardous
- Division 2: Not Normally Hazardous

Class II: Combustible Dust

Class III: Ignitable Fibers or Flyings

The NEC specifies luminaire characteristics for each type of exposure. **Enclosed-and-gasketed (vapor-tight)** luminaires also are available, and — in addition to other applications — they can be used to satisfy the requirements of Class I, Division 2 (Not Normally Hazardous) when the luminaire operating temperature meets other applicable NEC requirements. Other types of special-purpose luminaires rely on materials and/or finishes specifically selected to resist certain types of corrosive atmospheres.

Insofar as general industrial illumination is concerned, overall system efficiency is influenced considerably by luminaires because they determine how and how much of the source light is distributed.

Overall luminaire efficiency is determined as:

$$\text{Luminaire Efficiency} = \frac{\text{Lumens from Luminaires}}{\text{Lumens from Bare Lamps}}$$

Given the ratio, a luminaire that is 90 percent efficient traps about 10 percent of the lamps' light. Manufacturers do not generally report luminaire efficiency, relying instead on a far more significant measure called **coefficient of utilization (CU)**. CU is basically the same as efficiency, except the luminaire's output is based on the amount of light distributed to the work plane, where it is used:

$$\text{CU} = \frac{\text{Luminaire Lumens Distributed to the Work Plane}}{\text{Lumens from Bare Lamps}}$$

Another important rating factor is called **visual comfort probability**, or **VCP**. It indicates the number of people likely to be bothered by glare from a lighting system com-

STANDARD LAMP	REPLACEMENT LAMP	WATTAGE SAVINGS[2]	COMPARATIVE LIGHT OUTPUT OF REPLACEMENT LAMP[3]	VALUE OF ENERGY SAVINGS OVER LIFE OF REPLACEMENT LAMP AT 0.08/KWH	
60W Incandescent	55W Reduced-Wattage Incandescent	5	-	$ 0.40	
	13W TT Compact Fluorescent with Ballast Adapter	44.5	+	$ 35.60	X
75W Incandescent	70W Reduced-Wattage Incandescent	5	-	$ 0.40	
	22W Circline Fluorescent	45	-	$ 43.20	X
	18W Compact Fluorescent	57	-	$ 34.20	
100W Incandescent	95W Reduced-Wattage Incandescent	5	-	$ 0.40	
	44W Circline Fluorescent	56	-	$ 33.60	X
75W PAR-38 Spot or Flood Incandescent	65W PAR-38 Spot or Flood Incandescent	10	-	$ 1.60	
	45W Incandescent (Halogen)	30	-	$ 4.80	
150W R-40 Flood Incandescent	75W ER-30 Incandescent[5]	75	-	$ 12.00	
	120W ER-40 Incandescent[5]	30	++	$ 4.80	X
150W PAR-38 Spot or Flood Incandescent	90W PAR-38 Spot or Flood Incandescent (Halogen)	60	-	$ 9.60	
	120W PAR-38 Incandescent	30	-	$ 4.80	X
300W R-40 Flood Incandescent	120W ER-40 Incandescent[5]	180	-	$ 28.80	
500W Incandescent	450W Self-Ballasted Mercury Vapor[6]	50	*	$ 64.00	
1,000W Incandescent	750W Self-Ballasted Mercury Vapor[6]	250	-	$320.00	
F-40 Fluorescent	F-40 Reduced-Wattage, High-Efficiency Fluorescent	7	-	$ 11.20	
	F-40 Reduced Wattage, High-Efficiency Cathode-Disconnect Fluorescent	9.5	-	$ 15.20	
	F-40 Reduced-Wattage, High-Efficiency, Color-Improved Fluorescent	7	*	$ 11.20	X
	F-40 Reduced-Wattage High-Efficiency, Color-Improved Cathode-Disconnect Fluorescent	9.5	*	$ 15.20	X
	F-40 High-Brightness Fluorescent	0	+	$ 0.00	X
F-40 Fluorescent (U-Shape)	F-40 Reduced-Wattage, High-Efficiency Fluorescent (U-Shape)	7	-	$ 11.20	
F-96 Fluorescent	F-96 Reduced-Wattage, High-Efficiency Fluorescent	17.5	*	$ 16.80	
F-96 HO Fluorescent	F-96 HO Reduced-Wattage, High-Efficiency Fluorescent	21	*	$ 20.20	
F-96 1,500 MA Fluorescent	F-96 1,500 MA Reduced-Wattage, High-Efficiency Fluorescent	25	*	$ 20.00	
175W Mercury Vapor	150W Retrofit High-Pressure Sodium	40	++	$ 38.40	X
250W Mercury Vapor	215W Retrofit High-Pressure Sodium	65	++	$ 62.40	X
400W Mercury Vapor	325W Retrofit Metal Halide	70	++	$112.00	X
	400W Retrofit Metal Halide	0	++	$ 0.00	X
	360W Retrofit High-Pressure Sodium	60	++	$ 76.80	X
1,000W Mercury Vapor	880W Retrofit High-Pressure Sodium	160	++	$204.80	X
	950W Retrofit Metal Halide	50	++	$ 48.00	X

Notes

1. This table does not indicate all possible lamp replacement options and, in some cases, replacing the ballast and lamp, or relying on a new fixture, ballast, and lamp will provide better overall performance and energy management than the replacement shown. All numbers reported in the table are approximations, and in certain cases assumptions are made about the types of fixtures and other conditions involved. Consult manufacturers for accurate data relative to direct replacements possible for a given installation as well as any ballast operating temperature or other restrictions which may apply.

2. Wattage savings include ballast losses, where applicable, assuming use of a standard ballast. Actual ballast losses to be experienced depend on the specific type of ballast involved and operating conditions which affect its performance. In those cases where wattage savings exceed the difference in lamp wattage (if any), operation of the replacement lamp also has the effect of reducing ballast losses.

3. Symbols used indicate the following: ++ (substantially more), + (more), = (about the same), * (less), and - (substantially less). Consult manufacturers for accurate information relative to conditions unique to the lamps and installations involved).

4. Other benefits typically provided by retrofit lamps include: lower maintenance costs due to longer lamp life; improved productivity, safety/security, quality control, etc. due to higher light output; ability to reduce the number of lamps installed systemwide due to higher output of retrofit lamps, and improved color rendition.

5. When installed in a stack-baffled downlight.

6. For high voltages only.

Table 2: Interchangeability of several selected lamps.

posed entirely of the luminaires being rated. Standard tests are used to assure a uniform basis of comparison, but the utility of published data is limited; *both* VCP and CU vary considerably based on factors associated with the application involved. Computer software is used to access application-specific VCP and CU data, and most major manufacturers' application engineers provide assistance on request.

Two other factors to consider are **luminaire dirt depreciation** and **luminaire surface depreciation**. The luminaire dirt depreciation rating indicates the lighting fixture's ability to resist dirt build-up on light-reflecting surfaces, light transmission surfaces, and lamps. The luminaire surface depreciation rating indicates how well a luminaire resists deterioration of interior and exterior surfaces.

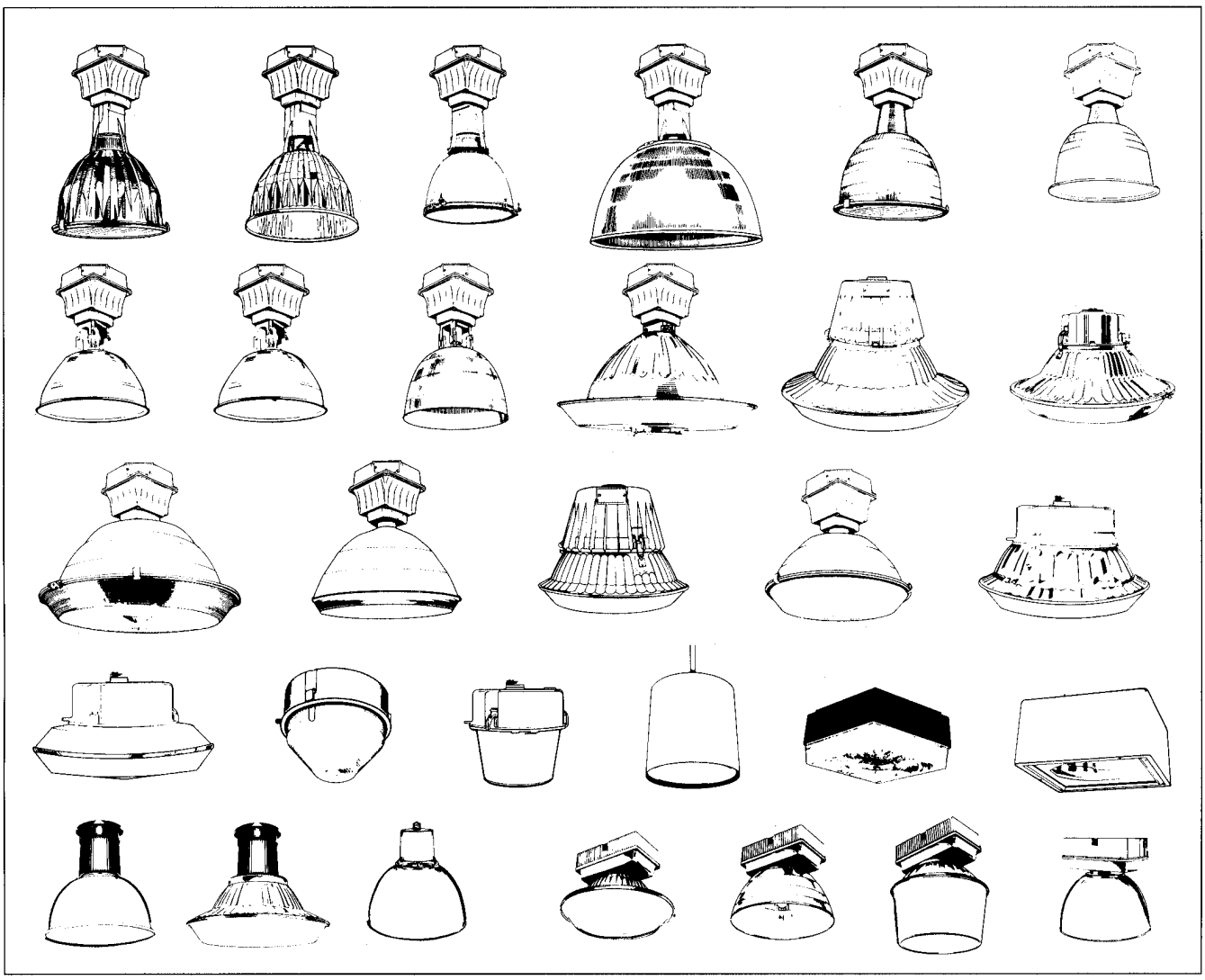

Figure 4: Typical industrial luminaires.

MANAGEMENT OPTIONS

Several luminaire management options are available. One of these is **luminaire modification**. The most common modifications tend to be simple, e.g., changes to facilitate use of a different type of lamp, installation of a more energy-efficient ballast, or reliance on more efficient and/or effective shielding and diffusing media. Any one of these changes is relatively simple and usually cost-effective, depending on the luminaire's age, overall condition, and its ability to provide desired conditions after modifications have been implemented. When two or three of the modifications apply, or when even more substantial changes are called for, cost-effectiveness must be examined very closely. While luminaire modification can reduce operating costs, a "modernized" luminaire seldom matches the overall performance of a new luminaire that has been developed and manufactured using state-of-the-art concepts, materials, and equipment. For this reason, **luminaire replacement** can be the wiser option.

A number of existing installations have been modified through installation of new reflective surfaces. Given the cost usually associated with this option, every facet of it should be closely reviewed. The optics of the modified luminaire are of particular concern. While new reflective surfaces may boost a luminaire's efficiency, they may not elevate CU by the same degree, and they could have a serious effect on VCP. It seldom (if ever) is wise to sacrifice or even risk sacrificing productivity or quality control in an effort to enhance lighting efficiency, since even a 30 percent energy savings is unlikely to carry a bottom-line value equivalent to a 1 percent productivity gain or loss.

In that the resurfacing option usually is sold on the basis of energy savings, the validity of proposed savings merits scrutiny. Typically, it is claimed that reliance on the new surface will permit more light output even though the number of lamps is reduced, e.g., from four to two. The basis for such claims usually is a comparison of the light output of a modified luminaire to that of the unmodified luminaire as it exists in place. For the comparison to be meaningful, however, the existing luminaire should first be cleaned and fitted with new lamps. Consider, too, the extent and cost of cleaning that may be necessary to maintain luminaire performance given the dust and other air-borne matter associated with plant processes.

Luminaire repositioning is another option to consider. Raising or lowering a luminaire modifies its

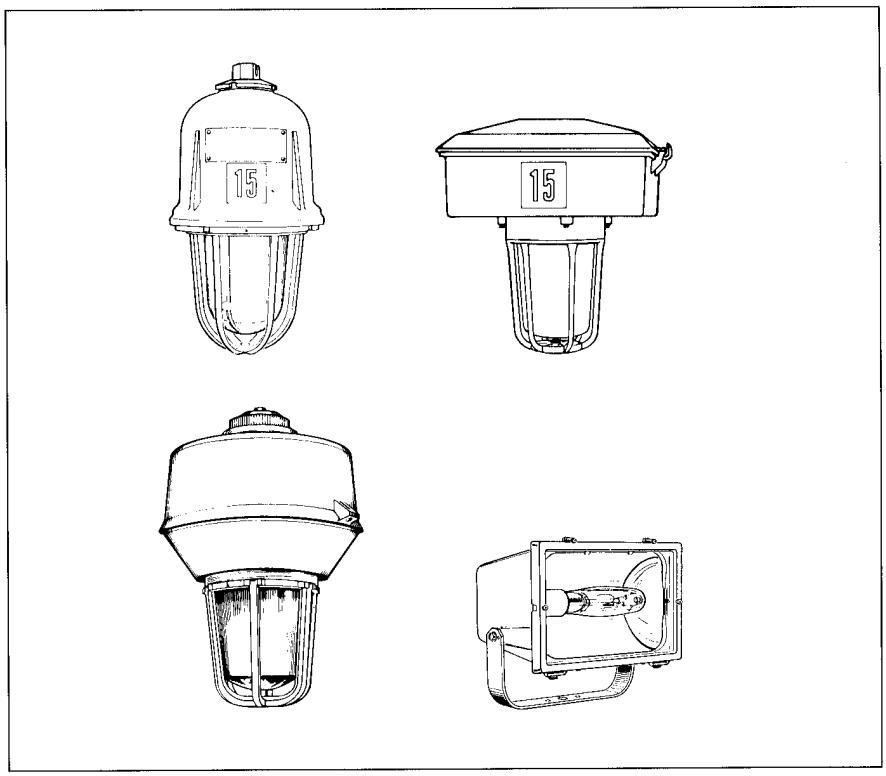

Figure 5: Hazardous location luminaires.

light distribution and can result in more or fewer luminaires being required to meet design lighting levels for the area. Luminaires can also be relocated with respect to workstations in the area, a technique employed to reduce the amount of veiling reflections with which workers must contend. Veiling reflections are a type of indirect glare that occurs when light from a luminaire bounces off the task and/or workstation surface, into the worker's eyes. This occurs most often when the light source is directly above and in front of the worker's line of sight, as shown in Figure 6. The visual effect is similar to what the worker would experience by looking at a task through a thin gauzy veil. Veiling reflections' impact on productivity and error rates makes their elimination an important objective. Although luminaire relocation can be an effective strategy, it may be far simpler and less expensive to relocate workstations instead. Reliance on more effective shielding/diffusing media is another alternative, discussed below.

Luminaire addition/deletion is an option available to keep the electric illumination system's configuration in line with needs. This approach is facilitated through flexibly wired systems, as already discussed.

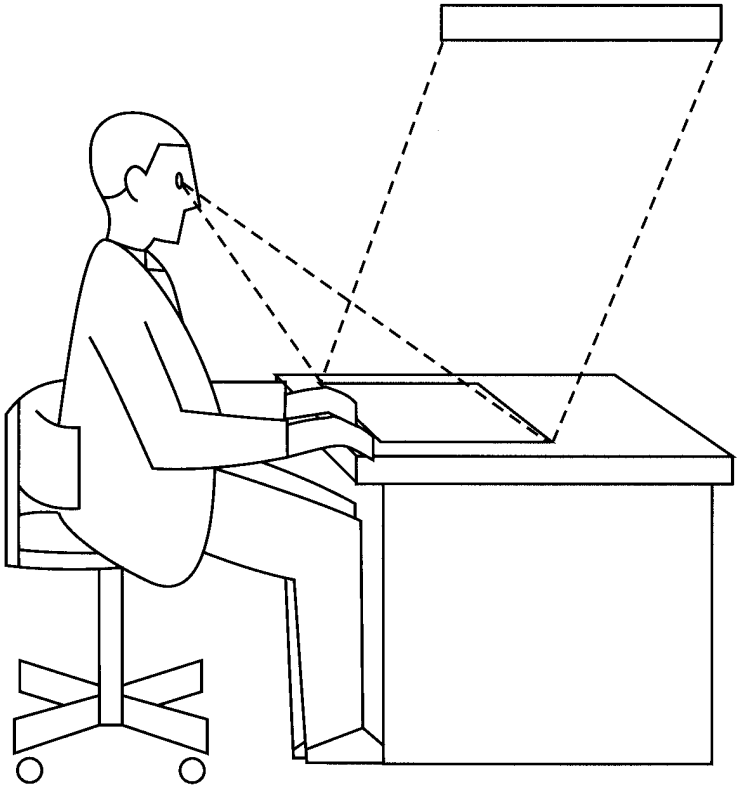

Figure 6: A form of indirect glare, veiling reflections occur when the light source is directly above and in front of a worker. Light bounces off the task surface and into the viewer's eyes, reducing contrast and thereby making it more difficult to see. Indirect glare of this type can be useful in certain quality control procedures, such as those used to inspect painted surfaces.

SHIELDING AND DIFFUSING MEDIA

Shielding and diffusing media shield lamps from direct view (to prevent glare) and diffuse or direct the light from the source through space. Shielding and diffusing media are diffusers, lenses, and louvers. A **diffuser** is an opaque or translucent glass or plastic cover located on the bottom and (sometimes) the sides of a luminaire to spread light from the source and reduce lamp brightness. A **lens** is a clear or transparent glass or plastic cover that relies on prisms and/or flutes (Figure 7) to refract light and control its distribution.

Louvers are physically open media manufactured from plastic, aluminum, or steel. Typified by the "egg-crate" design (Figure 8), they consist of a series of baffles that shield the lamps from view at most angles. Louvers permit more air circulation through a luminaire, resulting in cooler, more efficient operation of lamps, along with a potential

for accelerated dirt build-up.

A number of industrial luminaires have been designed to operate without shielding and diffusing media, relying instead on the shape of the luminaire and its reflective surfaces to direct light. Typically, these are positioned 20 feet or so above the floor, so their glare potential is limited. Luminaires designed to operate without shielding and diffusing media cannot easily be fitted with diffusers, lenses, or louvers, and their addition — even when easily accommodated — usually will not yield a significant benefit. In fact, installing a diffuser or lens on a luminaire designed for open operation could create heating or other problems, and thus cannot be recommended. If circumstances are such that shielding or diffusing media would enhance the performance of open luminaires, reliance on new luminaires would probably be appropriate.

Some luminaires designed for use with diffusers, lenses, or louvers have had those media removed, often from the belief that it permits more light to reach the workplane, thus lowering costs. This is not likely to be the outcome, however, since removal of shielding and diffusing media often increases glare, lowering productivity, and creating safety risks.

Glass diffusers and lenses provide a good combination of efficiency and quality. Depending on fixture design, they also are easy to clean. Their principal drawbacks are their weight, susceptibility to breakage, and higher initial cost. Note that, in some instances, certain types of glass must be used. For example, when double-ended compact metal halide lamps are employed, the luminaire must be equipped with a tempered, fully enclosing OV filter glass.

Acrylic, high-impact acrylic, and polycarbonate are the plastics most commonly used as diffuser or lens material. They are lighter and less expensive than glass, but are more susceptible to maintenance errors that can lead to scratching and/or discoloration.

The shape, dimensions, and layout of a louver's baffles determine its light distribution. The same factors influence CU and VCP ratings, and the louver's finish also has an impact. The open-baffled luminaire (Figure 9) has been

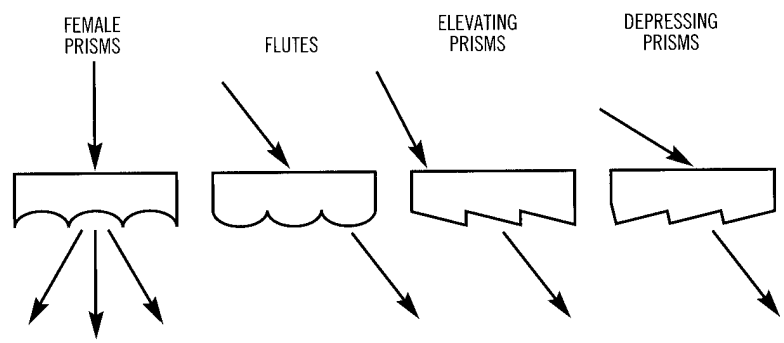

Figure 7: Many lenses rely on flutes and prisms to control the distribution of light.

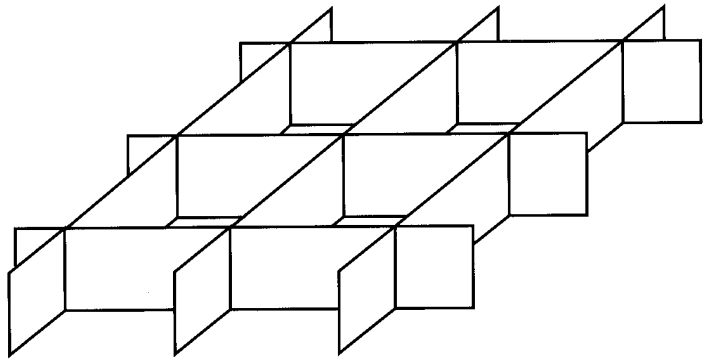

Figure 8: Typical "egg crate" louver design.

popular for a number of years; its even distribution of light to the workplane permits more spacing between fixtures. Deep-cell parabolic louvers are proving popular as low-glare media that are particularly suited for illuminating spaces where VDTs are used.

BALLASTS

Ballasts transform incoming utility power to make it suitable for the specific type and wattage of gas-discharge lamps installed. Without ballasts, the average life of lamps would best be rated in minutes instead of hours.

Great strides have been made in the field of fluorescent ballasts, such that their energy efficiency and versatility have been significantly enhanced. In fact, federal law now requires use of energy-efficient ballasts in most popular lighting systems. **Electronic ballasts** typify recent advances. They can reduce overall energy consumption of four-lamp fluorescent luminaires by some 20 to 26 percent when compared to yesterday's conventional electromagnetic ballasts. Some electronic ballasts also are capable of regulating fluorescent lamps' output between 20 percent and 100 percent of full light output. In response to remotely activated signals, electronic ballasts do this more efficiently and more cost-effectively than electromagnetic dimming ballasts.

(Electronic ballasts also have been developed for use with certain metal halide lamps. Compared to standard metal halide ballasts, they can enhance system efficiency, extend lamp life (by 20 percent), improve lumen maintenance, and reduce color variations over time, among other benefits.)

Energy-saving electromagnetic ballasts, now the new industry standard, reduce fluorescent lighting energy consumption by 8-10 percent when compared to conventional ballasts, while maintaining equivalent light output. **Hybrid electromagnetic energy-saving ballasts** provide a 17 to 26 percent energy reduction over conventional magnetic ballasts operating four-foot rapid start lamps. Some designs can provide equivalent savings to electronic units at equal light output levels, others at a slight reduction in light output.

Reduced light-output ballasts represent another option. They reduce energy consumption by about 20 percent, with a corresponding reduction of light output. They can be considered when the existing system produces more light than necessary. **Dual-level ballasts** permit lamps to operate at two levels of light output as controlled by an external switch.

MANAGEMENT OPTIONS

The life of a conventional fluorescent ballast averages 12-15 years. As such, many existing systems are ready for reballasting. Generally speaking, it is most cost-effective to do this on a group reballasting basis, whereby all ballasts are replaced at the same time. Although reliance on state-of-the-art electronic ballasts usually is worthwhile, that may not be the

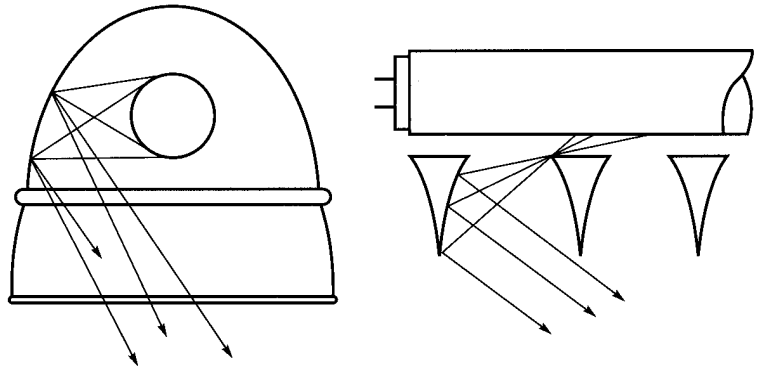

Figure 9: Open-baffled and parabolic luminaire light patterns.

case when the existing luminaires have little usable life remaining. No matter what type of ballast is used, however, the labor costs will be about the same. As such, when ballasts in existing luminaires are ready for replacement, the luminaires may be ready for replacement, too. Luminaire manufacturers are usually able to equip their products with whatever type of ballast is preferred. Use of new luminaires with high-efficiency, versatile electronic ballasts is one of the best options available. Note that energy-saving electromagnetic ballasts and electronic ballasts can be expected to last as long as 20 years or more.

CONTROLS

A wide array of manual and automatic controls is available to help match lighting usage to needs. This generally means adjusting the amount of light provided to the amount of light actually needed, either by permitting users to increase or decrease the amount of light provided by lamps or by turning them on and off on a selective basis.

In industrial settings, controls are applied almost exclusively to reduce energy consumption, and they can be cost-justified based on the value of savings. These savings can be particularly pronounced when controls are installed to reduce utility demand charges by helping to reduce system peaks. The specific controls selected to perform a given function should be compatible with the process in addition to being compatible with the existing equipment (when an existing system is involved) and facility-related factors. As with other system components, selections should be based on overall modifications contemplated, i.e., it would be inappropriate to specify controls to operate equipment scheduled for near-term replacement. Particularly with respect to process requirements, note that controls can in some cases affect the quality of light needed to perform a specific task, e.g., dimming usually affects the color of light output and thus may not be appropriate to color-sensitive tasks.

Manual controls are those that are adjusted or activated/deactivated by hand, as opposed to those that react to prevailing conditions, such as ambient light, or preset factors, such as time of day. A **circuit breaker** installed in a central panelboard is among the most common industrial lighting controls. Circuit breakers usually are located away from the work floor and often are turned on by the first to arrive and turned off by the last to leave. Each breaker controls a large number of luminaires with the result that most lighting is on most of the day. Because circuit breakers do not permit selective use of lighting, their use can result in energy waste. This waste may be relatively minor when multishift operations are involved, or when almost all workstations are in use during each shift.

Individual **wall switches**, also known as AC snap switches, can be located close to workstations, permitting more discriminate use of lighting; for example, when a worker leaves the area, the light for that area can be turned off, providing that lower light output in that area will not affect the quality of lighting needed by others. Wall switches also can be used to control rows of lighting on a selective basis. Whereas one switch may have been installed to control, say, twenty luminaires, another switch could be installed so that each of the two switches controls ten luminaires. In that way, half the lights could be deactivated when conditions are appropriate. Usage patterns would indicate which lights should be controlled, e.g., every other luminaire in a row, or the first ten for one switch and the second ten for another. Naturally, something other than an even division is possible.

Key-activated wall switches are essentially the same as conventional wall switches except their on/off function is controlled by a key rather than a toggle. In that manner, unauthorized use can be prevented. This approach may be particularly effective to help prevent accidental deactivation of HID lighting and the potential time loss associated with lamp cool-down prior to reactivation.

Low-voltage switching systems comprise on/off switches

interconnected by low-voltage wiring, magnetic relays, and transformers. The wall switches used look no different from conventional units, except they control relays that switch line voltage and current rather than performing that switching function directly. Low-voltage switching systems can be particularly effective in installations where voltage drop would otherwise be a problem. They permit control of one load from multiple locations or multiple loads from one central location, with or without local overrides.

Telephone signal-activated controls are used in conjunction with keypad telephones, permitting a user located almost anywhere to activate controlled units by entering the appropriate code. In some cases, workers use these controls to adjust lighting directly over their workstations, when proper light output is critical to task performance.

Line-carrier control systems use existing power wiring as a medium for control signals. They are an inexpensive alternative to installation of dedicated control wiring. The typical system employs small receivers/activators installed inside luminaires to control ballast operation. For example, in a luminaire housing four lamps and two ballasts, all four lamps or just two can be kept on. Control signals are sent to the receiver/activators by transmitters. Some models look like conventional wall switches and can be mounted in work areas close to the controlled fixtures. Centralized systems also are available, such as the "ballast load switching system" shown in Figure 10. The manual version of the central control panel might consist of little more than toggle switches appropriately marked to indicate which units or groups of units each controls. Note, however, that these systems are easily automated through integration with microprocessor-based devices or time clocks. In such cases, as with other automated systems, it sometimes is desirable to also integrate local wall switches to permit manual override.

Solid-state manual **dimmers** are available for incandescent and fluorescent lighting, as well as most HID and low-voltage sources. Some fluorescent dimming systems work in conjunction with special dimming ballasts or solid-state control packages that replace conventional ballasts. Others rely on an electronics package that operates with a standard ballast or a controllable light output electronic ballast that responds to signals from a compatibly designed, remotely mounted manual dimming control, ambient light sensor, or occupancy sensor. All such devices reduce

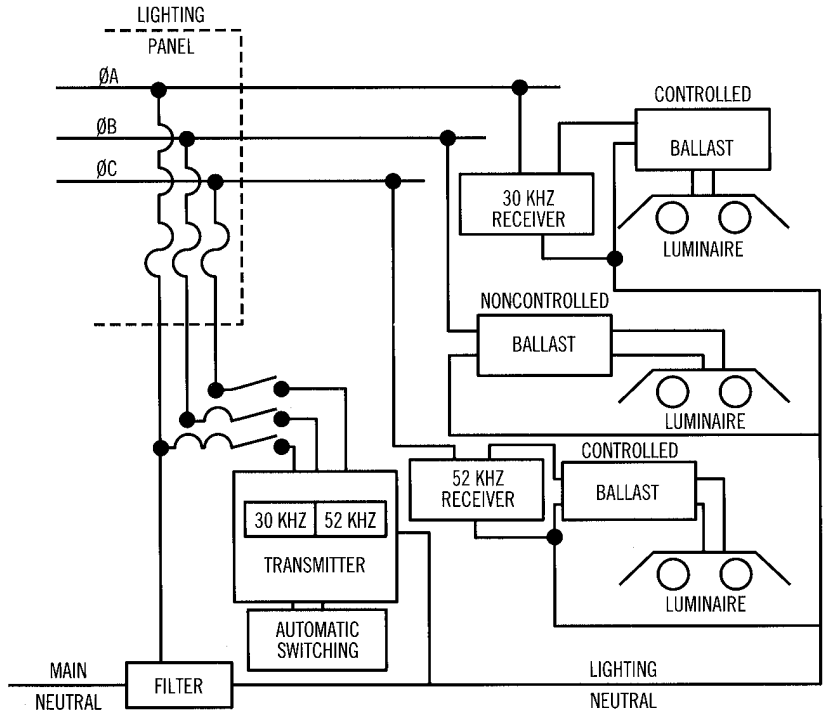

Figure 10: Ballast load switching system schematic.

energy consumption when light output is dimmed. A number of factors should be considered in selecting an approach. Whether a new or existing system is involved, component manufacturers should be consulted to determine what effects dimming may have on components and lighting quality.

Automatic controls have gained a great deal of popularity in recent years because they minimize reliance on human intervention — thus human memory — to achieve energy savings. **Door-activated controls** are a typical example used mostly in conjunction with doors to closets and other seldom-used spaces. A spring-activated switch located in a door jam activates lighting when the door is opened and then deactivates it when the door is closed. Some door switches activate lighting for a given period of time no matter how quickly the door may be closed.

Time clocks are another type of well-known automatic control, applied to activate and/or deactivate lighting at predetermined times. Both mechanical and electronic time clocks are available and most are programmable on at least a weekly basis. An "astronomic dial" can be specified for time clocks used to control outdoor lighting; the feature adjusts the control for changing hours of daylight and darkness during the year, and some account for leap year, too. Time clocks also can be equipped with battery packs or spring-wound mechanisms to maintain calibration despite power reductions or curtailments.

Photocell controls react to ambient lighting levels and turn lights on when ambient illuminance falls below a predetermined limit. They are used extensively to control outdoor lighting and are popular indoors as well, to control luminaires near windows and skylights. Photocell control systems are equipped with delay devices to prevent rapid cycling. As such, a given ambient condition would have to be maintained for a predetermined period of time, such as three minutes, before the photocell would act.

Photocell/dimmer controls increase or decrease the light output of controlled units in response to ambient lighting conditions to maintain a predetermined light level. These devices are commonly used indoors on luminaires near windows and skylights. They can be effective with almost any type of luminaire, however, when less than full light output is needed. In this way, output can be established in consideration of a given lamp type's LLD characteristics, permitting longer reliance on lamps and thus more time between replacements.

Photocell/time clock controls are used mostly with outdoor lighting. Typically, the time clock keeps lighting off for a predetermined period (e.g., 1:00AM-5:00AM) and, at all other times, on/off operations are performed by the photocell.

Time clock/dimmer controls are applied in those areas where illumination needs vary during predetermined times. In these instances, the time clock causes the dimmer to adjust output to the preferred level.

Occupancy sensors are specified mostly for seldom-used areas. They turn lighting on when a presence is detected and turn it off within a given period of time after a presence no longer is "observed." **Ultrasonic devices** detect occupancy by motion, and **passive infrared devices** detect infrared energy given off by people. Occupancy sensors can be used to control loads in addition to or other than lighting, such as remote HVAC units. They can also be used in conjunction with dimmers and as elements of security systems.

Centralized programmable lighting controls can control all lighting inside and/or outside a building or group of buildings. Most operate with a central control panelboard that displays the status of the various relays in the system. Some of the central systems have been designed specifically for lighting; others can be used to control virtually any type of load.

Intelligent building controls are integrated with a central computer that typically would be used to oversee a number of process operations and/or to maintain given environmental conditions. They are multifunction systems into which lighting can be integrated.

MANAGEMENT OPTIONS

The basic control option is to determine which types are or will be applicable, and — of these — which are most cost-effective. These decisions would be made, along with others, as part of overall development of the lighting management plan.

MAINTENANCE

Maintenance can be as important a lighting system component as almost any of the other elements discussed. Because this fact is not well-recognized, however, many existing industrial lighting systems are not as effective or efficient as they otherwise could be. For this reason, the National Lighting Bureau endorses a concept called **planned lighting maintenance (PLM)**. It involves two key strategies: regular cleaning and timely lamp replacement.

The frequency of routine cleaning should be based upon the nature of the processes performed in the illuminated space and the nature of the lighting equipment used. Cleaning should be performed frequently enough to prevent excessive build-up of dust and dirt that can severely diminish light output.

Timely lamp replacement (TLR) involves the removal of lamps before they burn out, at some appropriate time during the lamp's life cycle, based on its LLD characteristics.

By applying the two basic elements of PLM, the average amount of light produced by the system is much greater than it otherwise would be, since it is far less affected by light-robbing dust and dirt as well as lamp lumen depreciation. As a consequence, when they know PLM will be applied, many lighting designers eliminate "compensatory lighting," that is, additional illumination installed to help assure adequate lighting despite poor maintenance. In many instances, reliance on PLM can permit luminaire reductions of 20 percent or more. Similarly, when an existing system's maintenance routine is converted to PLM, it may be possible to deactivate a

	WITHOUT PLM	WITH PLM	SAVINGS
Luminaires	200	180	20 luminaires
Lamps/Luminaire	1	1	
Load/Luminaire	275W	275W	
System Load	55kW	49.5kW	5.5kW
Hours of Use	4,000 hrs/yr	4,000 hrs/yr	
KWh/Year	220,000kWh/yr	198,000kWh/yr	22,000kWh/yr
Avg. $/kWh (incl. dem.)	$0.10/kWh	$0.10/kWh	
Energy Cost	**$22,000/yr**	**$19,800/yr**	**$2,200/yr**
Useful Lamp Life	24,000 hrs	18,000 hrs	(6,000 hrs)
Lamps Replaced	33.3 lamps/yr	40.0 lamps/yr	(6.7 lamps/yr)
Cost/Lamp	$40	$40	
Replacement Lamp Cost	**$1,332/yr**	**$1,600/yr**	**($268/yr)**
Time to Replace One Lamp	0.67hr/lamp	0.17hr/lamp	0.50hr/lamp
Relamping Labor Time	22.3hrs/yr	6.8hrs/yr	15.5hrs/yr
Labor Cost	$10/hr	$10/hr	
Relamping Labor Cost	**$223/yr**	**$68/yr**	**$155/yr**
Cleaning Time	0.1hr/lum	0.1hr/lum	
Cleaning Time/Year	20hrs/yr	18hrs/yr	2hr/yr
Cleaning Cost/Year	**$200/yr**	**$180/yr**	**$20/yr**
Total O&M Costs	**$23,755/yr**	**$21,648/yr**	**$2,107/yr**

Table 3. PLM comparison.

number of existing luminaires.

In practice, one of the biggest obstacles to achieving PLM can be well-intentioned maintenance personnel who find it wasteful to discard lamps that are still working. Data shown in Table 3 indicate that such an attitude can be costly. The installation involved comprises 200 HID lamps and luminaires operated 4,000 hours per year, each lamp having a rated life of 24,000 hours. At an assumed cost of $40/lamp, the annualized cost of replacement lamps is $1,332. When PLM is applied to the system, the number of its luminaires can be reduced by a conservative 10 percent to 180. However, lamps are replaced more frequently, at 18,000 hours instead of the rated life of 24,000 hours, increasing the cost of replacement lamps by $268/year. This premium is much more than offset by energy/demand cost savings of $2,200/year, relamping labor cost savings of $155/year, and cleaning cost savings of $20/year. The relamping labor cost savings are due to reliance on group relamping. It is assumed that, when all materials, equipment, and personnel are assembled to replace lamps, each lamp can be replaced in approximately 10 minutes. By comparison, when lamps are replaced on a spot basis, an assumed 40 minutes are required. Although group relamping does not eliminate the need for some spot relamping, it does tend to minimize replacement requirements and likewise permits smaller lamp inventories. In turn, smaller lamp inventories result in fewer dollars tied up in material sitting on a shelf, less space needed, less breakage, and less "inventory shrinkage." In addition, when all lamps are purchased on a bulk basis at the same time, discounts may be attainable. Note, too, that group relamping can be performed on a contract basis, something that many facilities have found to be a particularly cost-saving measure.

Developing and Implementing a Lighting Management Plan

When an existing system is involved, developing and implementing a lighting management plan is a **five-step process**. The **first step** is conducting a lighting system audit. Procedures for doing so are detailed in *Conducting a Lighting System Audit*, also published by the National Lighting Bureau. Generally speaking, organizations are well-served by having the audit conducted by or with the assistance of a qualified lighting professional. The professional can identify problems more quickly and accurately than others and, at the same time, identify opportunities for saving energy and enhancing lighting quality in order to achieve productivity and related benefits. When a lighting system audit is accomplished on a "do-it-yourself" basis, required materials and equipment typically would include a high-quality lightmeter, a stepladder, notepad and pencils (or a tape recorder), an instant-developing camera, and graph paper to indicate where luminaires and workstations are located in a space. The latest edition of the *IES Lighting Handbook* would be essential for guidance and data about appropriate lighting quantities and quality concerns.

The National Lighting Bureau has developed a lighting management audit form that indicates almost 20 factors that should be considered, including types of luminaires, input watts per luminaire, annual energy consumption, annual lighting energy cost, replacement lamp cost, other maintenance costs, control techniques, visual task performed, amount of light on task, and similar, related elements. In addition, the form calls for recording user comments, i.e., opinions from those performing tasks in the illuminated space to indicate the degree to which lighting is a support or hindrance.

After conducting a physical review of the system and interviewing users, it should be possible to move to the **second step**, identifying applicable lighting management options. Some of these may be mutually exclusive and, accordingly, it would be appropriate to cost-analyze each to determine the best choice.

Once management has identified the options that will be implemented, the **third step** can be taken: Creating a plan that indicates what will be done and when it will be done. A technique for implementing this step is indicated in Figure 11. Documentation is provided to indicate the location of the luminaire, the type of lighting used, the quality and quantity of light desired, energy consumption, and related factors.

The **fourth step** of the process is implementation of the plan. Very often this is done in stages, beginning with the highest benefit-cost ratio options. Generally speaking, it is worthwhile to keep all employees informed of impending changes since they will be most affected by them.

The **final step** of the process is keeping the plan current. This is done by monitoring results to determine their effectiveness and the efficacy of the plan itself. Usually it is appropriate to review progress every six months or so,

and to evaluate proposed future options closely. The lighting industry is known for its rapid technological progress; even within a year after an option has been identified for future application, it is possible that a new product might be better suited. For this reason, it is suggested that a qualified lighting professional be consulted on a continuing basis. In that regard, two important facts should be noted. First, lighting professionals cannot do it on their own. They need to have firsthand input from managers and supervisors in the space to attune their recommendations to actual needs. Second, the fee that may have to be paid to retain a top-flight professional should be viewed in light of the benefits to be derived. These benefits go far beyond energy savings, to include those associated with improved productivity, fewer rejects, fewer accidents, and so on.

RECOMMENDATION NO. 32

Location: Area A outlined on floor plan.

Type of Lighting: Open fluorescent two-lamp slimline.

Quality/Quantity: Generally acceptable diffuse providing 100fc.

Energy Consumption: 88,128 kWh/yr.

Energy Cost: $7050/yr.

Maintanence Cost: None.

Modification: Relocate workstations marked X on plan to area A. Tasks performed at X workstations performed during dayshift only. Provide 25% illumination to area during night shift. Monitor to assure that calculated luminance ratios are derived and acceptable.

Benefits: Eliminates unnecessary kWh.

Cost: In-house labor for move; electrical contractor for switching. (See energy calculations under LMO-18.)

Energy Consumption (New): 55,080 kWh/yr.

Energy Savings: 33,048 kWh/yr.

Energy Cost Savings: $2644/yr.

Maintainance Cost (New): See No. 14.

Payback: About immediate (reswitching cost allocated to No. 18).

Figure 11: A technique for preparing Lighting Management Option (LMO) descriptions.

Sources of Assistance

Many organizations can be of assistance through their literature, manuals, and other products and services. Some of the groups you may wish to contact include those listed below.

THE NATIONAL LIGHTING BUREAU

The NLB has worked for many years to acquaint lighting system decision-makers with the benefits afforded by effective lighting and the many options available to derive these benefits at minimal expense. Other publications available from the Bureau include *Getting the Most from Your Lighting Dollar*, a widely distributed "primer" on electric illumination, as well as guides relating to curing VDT viewing problems, conducting a lighting management audit, and applying lighting management to modernization projects and other types of operations, such as offices and retail facilities. An illustrated directory of Bureau publications is available free of charge. **(National Lighting Bureau, 2101 L Street, N.W., Suite 300, Washington, DC 20037)**

ILLUMINATING ENGINEERING SOCIETY OF NORTH AMERICA

The IESNA is a North American membership organization with Sections throughout the United States, Canada, and Mexico. Many of its members are lighting designers and consulting engineers. Others are affiliated with electric utilities, manufacturers, distributors, contractors, universities, and other organizations. IESNA publishes the *IES Lighting Handbook*, a two-volume set that most lighting professionals consider the "Bible of the industry." IESNA also publishes some less technical materials that can be of help. **(Illuminating Engineering Society of North America, 345 East 47th Street, New York, NY 10017)**

NATIONAL ELECTRICAL CONTRACTORS ASSOCIATION

NECA is a national association of electrical contractors. The organization has chapters throughout the United States that can provide general guidance as well as referrals. In addition to installing lighting systems, many electrical contractors have complete design departments. Some also are active in the areas of equipment leasing and contract lighting maintenance. NECA can furnish a listing of its chapter offices on request. **(National Electrical Contractors Association, 3 Bethesda Metro Center, Suite 1100, Bethesda, MD 20814)**

NATIONAL ASSOCIATION OF ELECTRICAL DISTRIBUTORS

NAED is a national association of electrical distributors, i.e., firms that stock and sell lighting system components among other electrical apparatus. NAED sponsors comprehensive lighting seminars and is otherwise active in increasing its members' knowledge of lighting. Many electrical distributors can provide effective guidance on options available and their costs. **(National Association of Electrical Distributors, 28 Cross Street, Norwalk, CT 06851)**

INTERNATIONAL ASSOCIATION OF LIGHTING MANAGEMENT COMPANIES

Known as NALMCO, the organization comprises lighting system maintenance contractors, that is, firms that provide contract lighting maintenance, such as scheduled lamp replacement and luminaire cleaning. Many NALMCO members also perform reballasting and luminaire modernization, among other services. NALMCO sponsors seminars and other training activities for its members and offers two certification programs, for Certified Lighting Management Contractors and Certified Lighting Management Consultants. **(International Association of Lighting Management Companies, 34-C Washington Rd., Princeton Junction, NJ 08850)**

MANUFACTURERS

Manufacturers can provide catalogs and other materials that relate information on their products. Many also furnish guides that provide general information on lighting, specific types of components, and so on. In addition, manufacturers' sales representatives and application engineers can provide valuable assistance in the design and specification process. Most use sophisticated computer programs for these purposes, and some also have computer programs that can provide data relative to life-cycle cost.

ELECTRICAL UTILITIES

Most electrical utilities have energy conservation departments and many of these include lighting specialists. These individuals can be of substantial assistance in many cases. Note, too, that a number of electrical utilities have developed rebate programs to encourage their customers to conserve energy. The concept is that it is far less costly to make an additional kilowatt available through conservation than it is through the addition of increased capacity. Therefore, the utility is willing to create incentives by paying fixed amounts for reliance on more efficient components, such as lamps and ballasts.

OTHERS

In most metropolitan areas, chapters of national groups are available to provide assistance, at least through referrals. These include associations of consulting engineers, property managers, and others who are involved with lighting system design, management, operation, and maintenance. Some of these organizations may be found in a yellow pages directory under headings associated with membership, e.g., "engineers, consulting," "engineers, illuminating," "contractors, electrical," and so on. Many also will be listed under "associations."

A state energy office may also be of value. Some also have incentive programs they can make available, and many of them have publications.

Glossary of Terms

Ballast: A device that modifies incoming voltage and controls current to provide the electrical conditions necessary to start and operate electric discharge lamps.

Brightness: As commonly applied, brightness is the intensity of the sensation that results from viewing a surface or space that directs light into the eyes.

Coefficient of Utilization: A measure commonly applied to indicate the efficiency of a luminaire. Coefficient of utilization (CU) comprises a ratio of the light delivered to the area to be illuminated compared to the total light output of the lamp(s) alone.

Contrast: The relationship between the brightness of an object and its immediate background. An example of this would be the relationship between the letters printed on this page and the paper itself. An example of poor contrast would be a third or fourth carbon copy of a purchase order or computer printout.

Diffuser: A device commonly put on the bottom or sides of a luminaire to redirect or spread the light from a source. It is used to reduce brightness from the source.

Footcandle: The basic measure used to indicate illuminance (level of illumination). One footcandle is equal to one unit of light flux (one lumen) distributed evenly over a one-square-foot surface area.

Footcandle (or Uniformity) Ratio: The relationship between average footcandles and minimum footcandles (such as 3:1) or maximum footcandles and minimum footcandles (such as 6:1). The maximum-to-minimum ratio generally is preferred because average footcandles cannot be seen.

Footcandles, Average: The theoretical average amount of light falling on a surface, as derived by averaging the illumination falling on all points of the surface. Two systems may produce identical average footcandles while providing highly dissimilar illumination.

Footcandles, Horizontal: Footcandles perpendicular to a horizontal surface, such as a street. All horizontal footcandles are in the same plane for the same surface. They can be added together arithmetically when more than one source provides light to the same surface.

Footcandles, Initial: Footcandles (minimum, maximum, or average) produced when lamps and luminaires are new.

Footcandles, Maintained: Footcandles (minimum, maximum, or average) calculated through application of a light loss factor.

Footcandles, Maximum: The amount of light falling on that point of a surface with the most illumination.

Footcandles, Minimum: The amount of light falling on that point of a surface with the least illumination.

Footcandles, Vertical: Footcandles perpendicular to a vertical surface, such as a wall or storage rack. Vertical footcandles may not all be in the same plane. Vertical footcandles from different sources may not be additive, depending on the direction of the light emitted by these sources.

Glare: A discomforting or disabling condition that occurs when a high-brightness source contrasts with a low-brightness background, making it difficult for eyes to adjust; e.g., an oncoming car's high beams at night. High brightness alone does not cause glare.

HID: High-intensity discharge lighting including mercury vapor, metal halide, and high-pressure sodium light sources. Although low-pressure sodium lamps are sometimes included in the HID category, they are not HID sources.

Lamp: A light source, commonly called a bulb or tube.

Lens: A glass or plastic shield that covers the bottom, and sometimes sides, of a luminaire. Lenses can also be designed to control the direction and brightness of the light as it comes out of the luminaire.

Light Loss Factor: A multiplier that is applied to account for conditions that reduce light output over time. These include temperature and voltage variation, lamp aging, and dirt build-up on lamp, luminaire, and room surfaces. In common practice, light loss factors are applied to initial footcandles to determine the light level that will be maintained in a given area.

Louver: A series of baffles arranged in a geometric pattern used to shield a lamp from view at certain angles, to avoid glare from the bare lamp(s).

Luminaire: A complete lighting fixture including one or more lamps and a means for connection to a power source. Many luminaires also include one or more ballasts and elements to position and protect lamps and distribute their light.

Nonuniform Lighting: A system that has lighting located with respect to the tasks, so more lighting falls on these tasks than on surrounding areas.

Reflector: A device used to redirect the light from a lamp or luminaire by the process of reflection.

Task Lighting: The lighting, or amount of light, that falls on a given visual task.

Veiling Reflection: Also known as reflected glare, a reflection of a light source that partially or totally obscures details by reducing the contrast between task details and their background.